30 041 DC1 **GROHE RED DUO FAUCET AND M SIZE BOILER**

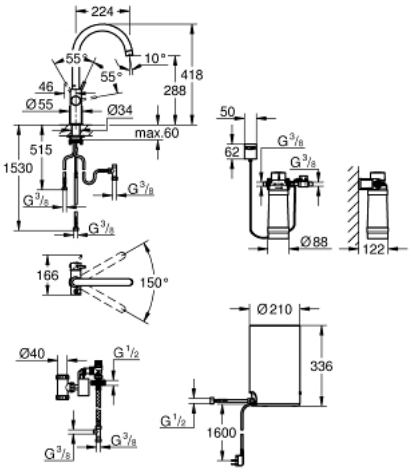

PRODUCT DESCRIPTION

- Colour: supersteel
- consisting of:
- GROHE Red Duo single-lever sink mixer
- single hole installation
- C-spout
- GROHE ChildLock push buttons for boiling water
- triple electronic safeguards against accidental activation of boiling water
- GROHE Long-Life finish
- GROHE SilkMove 28 mm ceramic cartridge
- GROHE CoolTouch
- insulated tubular spout
- swivel area 150°
- separate water ways
- flexible connection hoses
- connection to GROHE Red boiler
- GROHE Red boiler M size
- reservoir for boiling and hot water
- 3 liter 100° C boiling water
- 4 liter total capacity
- required inlet pressure: 1-7 bar
- with flexible connection hose and outlet for boiling water
- CE approved
- power supply 230 V 50 Hz
- max. power consumption 2100 W
- standby power consumption 15 W
- energy efficiency class A
- GROHE Red filter set
- for protection of the boiler from limescale
- capacity 600 l at 20° dKH
- 5 phase filter
- flow rate measuring unit